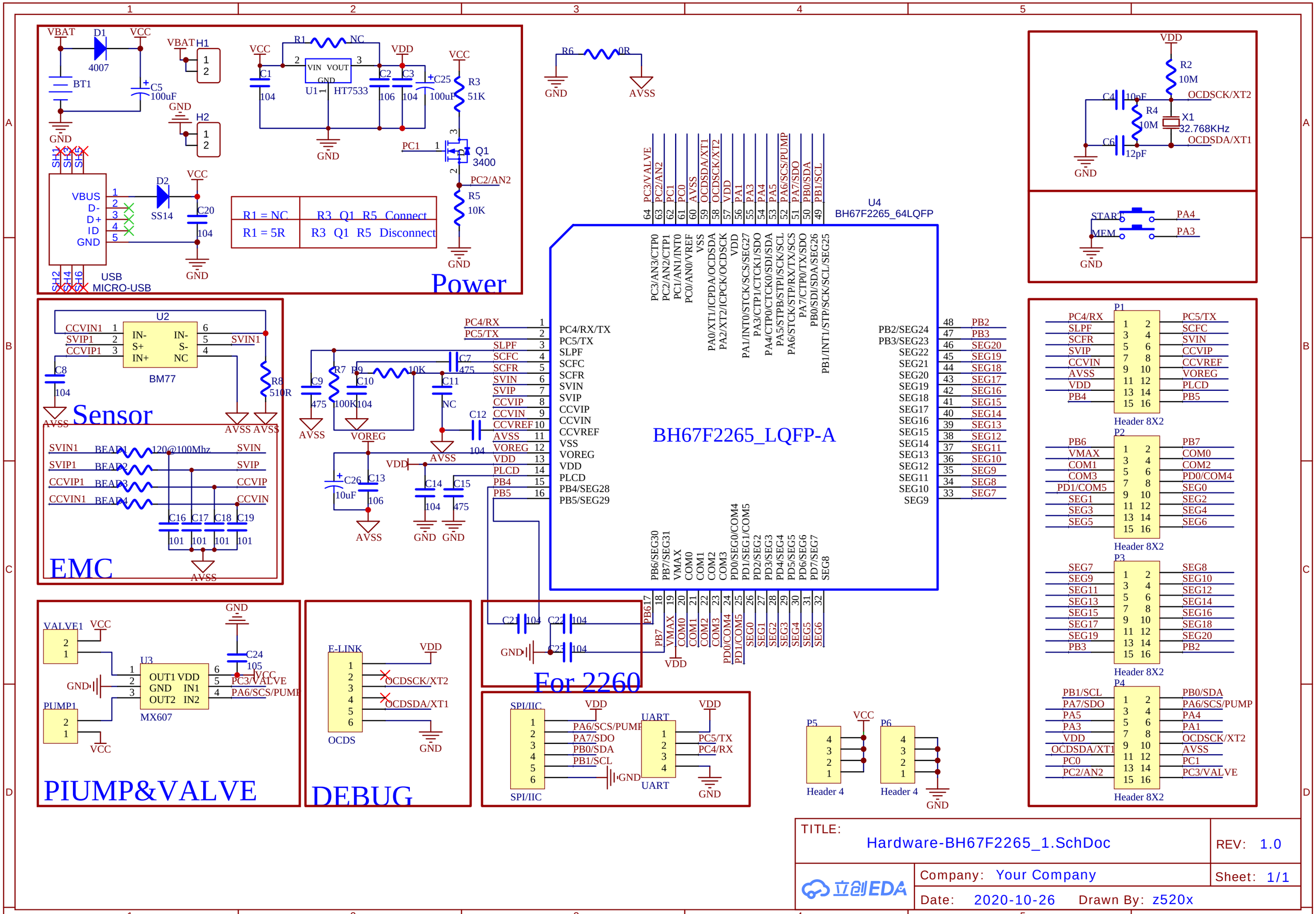
Power
VBAT
D1
4007
VCC
BT1
C5
100uF
GND
H1
H2
R1
NC
VIN VOUT
GND
U1
HT7533
C1
104
C2
106
C3
104
C25
100uF
R3
51K
PC1
Q1
3400
PC2/AN2
R5
10K
R1 = NC
R3 Q1 R5 Connect
R1 = 5R
R3 Q1 R5 Disconnect
VBUS
D-
D+
ID
GND
D2
SS14
C20
104
USB
MICRO-USB
R6
0R
AVSS
U4
BH67F2265_64LQFP
BH67F2265_LQFP-A
PC3/VALVE
PC2/AN2
PC1
PC0
AVSS
OCDSDA/XT1
OCDSCK/XT2
VDD
PA1
PA3
PA4
PA5
PA6/SCS/PUMP
PA7/SDO
PB0/SDA
PB1/SCL
PC3/AN3/CTP0
PC2/AN2/CTP1
PC1/AN1/INT0
PC0/AN0/VREF
VSS
PA0/XT1/ICPDA/OCDSDA
PA2/XT2/ICPCK/OCDSCK
VDD
PA1/INT0/STCK/SCS/SEG27
PA3/CTP1/CTCK1/SDO
PA4/CTP0/CTCK0/SDI/SDA
PA5/STPB/STPI/SCK/SCL
PA6/STCK/STP/RX/TX/SCS
PA7/CTP0/TX/SDO
PB0/SDI/SDA/SEG26
PB1/INT1/STP/SCK/SCL/SEG25
PC4/RX
PC5/TX
SLPF
SCFC
SCFR
SVIN
SVIP
CCVIP
CCVIN
CCVREF
AVSS
VOREG
VDD
PLCD
PB4
PB5
PC4/RX/TX
PC5/TX
SLPF
SCFC
SCFR
SVIN
SVIP
CCVIP
CCVIN
CCVREF
VSS
VOREG
VDD
PLCD
PB4/SEG28
PB5/SEG29
PB2/SEG24
PB3/SEG23
SEG22
SEG21
SEG20
SEG19
SEG18
SEG17
SEG16
SEG15
SEG14
SEG13
SEG12
SEG11
SEG10
SEG9
PB2
PB3
SEG20
SEG19
SEG18
SEG17
SEG16
SEG15
SEG14
SEG13
SEG12
SEG11
SEG10
SEG9
SEG7
PB6/SEG30
PB7/SEG31
VMAX
COM0
COM1
COM2
COM3
PD0/SEG0/COM4
PD1/SEG1/COM5
PD2/SEG2
PD3/SEG3
PD4/SEG4
PD5/SEG5
PD6/SEG6
PD7/SEG7
SEG8
PB617
PB7
VMAX
COM0
COM1
COM2
COM3
PD0/COM4
PD1/COM5
SEG0
SEG1
SEG2
SEG3
SEG4
SEG5
SEG6
R2
10M
C4
10pF
R4
10M
X1
32.768KHz
C6
12pF
OCDSCK/XT2
OCDSDA/XT1
START
MEM
PA4
PA3
Sensor
U2
BM77
CCVIN1
SVIP1
CCVIP1
IN-
S+
IN+
IN-
S-
NC
SVIN1
C8
104
R8
510R
AVSS
EMC
BEAD1
BEAD2
BEAD3
BEAD4
120@100Mhz
SVIN
SVIP
CCVIP
CCVIN
C16
C17
C18
C19
101
R7
R9
10K
C9
475
C10
100K
104
C7
475
C11
NC
C12
104
C26
10uF
C13
106
C14
104
C15
475
VOREG
VDD
For 2260
C21
104
C22
104
C23
104
PIUMP&VALVE
VALVE1
PUMP1
U3
MX607
OUT1 VDD
GND IN1
OUT2 IN2
C24
105
PC3/VALVE
PA6/SCS/PUMP
DEBUG
E-LINK
OCDS
OCDSCK/XT2
OCDSDA/XT1
SPI/IIC
PA6/SCS/PUMP
PA7/SDO
PB0/SDA
PB1/SCL
UART
PC5/TX
PC4/RX
P5
P6
Header 4
P1
P2
P3
P4
Header 8X2
PC4/RX
SLPF
SCFR
SVIP
CCVIN
AVSS
VDD
PB4
PC5/TX
SCFC
SVIN
CCVIP
CCVREF
VOREG
PLCD
PB5
PB6
VMAX
COM1
COM3
PD1/COM5
SEG1
SEG3
SEG5
PB7
COM0
COM2
PD0/COM4
SEG0
SEG2
SEG4
SEG6
SEG7
SEG9
SEG11
SEG13
SEG15
SEG17
SEG19
PB3
SEG8
SEG10
SEG12
SEG14
SEG16
SEG18
SEG20
PB2
PB1/SCL
PA7/SDO
PA5
PA3
VDD
OCDSDA/XT1
PC0
PC2/AN2
PB0/SDA
PA6/SCS/PUMP
PA4
PA1
OCDSCK/XT2
AVSS
PC1
PC3/VALVE
TITLE:
Hardware-BH67F2265_1.SchDoc
REV: 1.0
Company: Your Company
Sheet: 1/1
Date: 2020-10-26
Drawn By: z520x
立创EDA