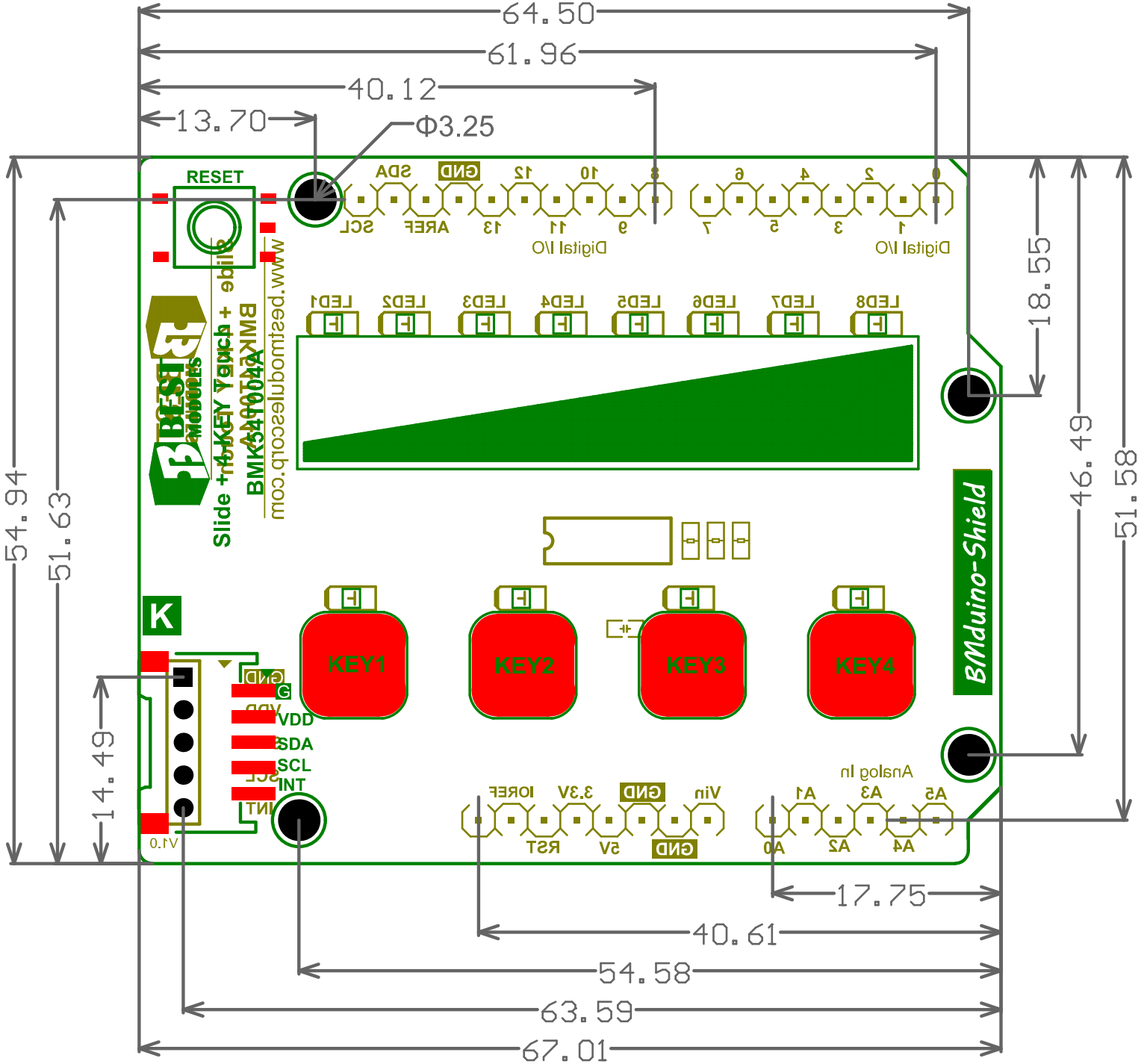

measurements in Millimeters